Course Code: B20 BS 2102

SAGI RAMA KRISHNAM RAJU ENGINEERING COLLEGE (A) **R20**

II B. Tech I Semester - MODEL QUESTION PAPER

NUMERICAL METHODS AND ADVANCED CALCULUS

(Common to ECE & ME)

TIME: 3 Hrs. **Max. Marks: 70 M**

Answer any One Question from Each Unit

All questions carry equal marks

	UNIT-I	**CO**	**KL**	**M**
1.a)	Find the root of the equation $2x - \log_{10} x = 7$, using Newton -Raphson method.	1	3	7
b)	Find the root of the equation $x^3 - x - 1 = 0$, using Regula - Falsi method.	1	3	7
	OR			
2. a)	Using Newton's Forward Interpolation formula find $f(5)$ for the following data **x**: 4, 6, 8, 10 y= $f(\mathbf{x})$: 1, 3, 8, 16	1	3	7
b)	Using Lagrange's interpolation formula to find value of y when $x = 10$ from the following **x**: 5, 6, 9, 11 y: 12, 13, 14, 16	1	3	7
	UNIT-II			
3.a)	Use the Trapezoidal rule to estimate the $\int_0^2 e^{x^2} d\mathbf{x}$, by taking 8 intervals.	2	3	7
b)	Solve by Taylor's series method the equation $\frac{dy}{dx} = \log xy$, for $y(1.1)$ given that $y(1) = 2$.	2	3	7
	OR			
4. a)	Find an approximate value of y when $x = 0.1$, if $\frac{dy}{dx} = x - y^2$ and $y = 1$ at $x = 0$, using Picard's method.	2	2	7
b)	Use fourth order Runge-Kutta method to find y at $x = 0.1$, given that $\frac{dy}{dx} = 3e^{\mathbf{x}} + 2y, y(0) = 0$ and $h = 0.1$.	2	3	7
	UNIT-III			
5.a)	Evaluate $\iint xy\, dx\, dy$ over the 1st quadrant of the circle $x^2 + y^2 = a^2$.	3	3	7
b)	Evaluate by changing the order of integration $\int_0^1 \int_{x^2}^{2-x} xy\ dy\, dx$.	3	3	7
	OR			
6. a)	Evaluate $\int_0^1 \int_0^{\sqrt{1-y^2}} (x^2 + y^2)\, dx\, dy$ by changing into polar coordinates	4	3	7
b)	Evaluate $\int_0^1 \int_0^{\sqrt{1-x^2}} \int_0^{\sqrt{1-x^2-y^2}} xyz\, dx\, dy\, dz$	4	3	7
	UNIT-IV			
7. a)	Find a unit vector normal to the surface $xy^3z^2 = 4$ at the point (-1,-1,2)	5	3	7
b)	Find the directional derivative of $f(x, y, z) = xy^3 + yz^3$ at the point (2,-1,1) in the direction of vector $\bar{I} + 2\bar{J} + 2\bar{K}$.	5	3	7
	OR			
8.	Verify Green's theorem for $\oint_C [(3x - 8y^2)dx + (4y - 6xy)dy]$ where 'C' is the boundary of the region bound by x=0, y=0 and x+y=1.	5	3	7

	UNIT-V			
9.a)	Prove that the function defined by $f(z)=\frac{(1+i)x^3-(1-i)y^3}{x^2+y^2}(z=0), and\ f(0)$ is continuous and the Cauchy Riemann equations are satisfied at the origin, yet $f^1(0)$ do not exist.	6	3	7
b)	Find the complex potential w and velocity potential ϕ when its stream function is $\psi=\tan^{-1}\left(\frac{y}{x}\right)$	6	3	7
	OR			
10.a)	If $f(z)$ is a regular function of z, prove that $\left(\frac{\partial^2}{\partial x^2}+\frac{\partial^2}{\partial y^2}\right)\lvert f(z)\rvert^2=4\lvert f'(z)\rvert^2$	6	3	7
b)	Find the bilinear transformation that maps the points, $(\infty,i,0,)$, into the point $(0,1,\infty)$.	6	3	7

CO-COURSE OUTCOME **KL-KNOWLEDGE LEVEL** **M-MARKS**

					Course Code: B20ME2101
		SAGI RAMA KRISHNAM RAJU ENGINEERING COLLEGE (A)			**R20**
		II B.Tech. I Semester MODEL QUESTION PAPER			
		ENGINEERING THERMODYNAMICS AND IC ENGINES			
		Mechanical Engineering			
Time: 3 Hrs.					**Max. Marks: 70 M**
		Answer **ONE Question** from **EACH UNIT**			
		All questions carry equal marks			
		Assume suitable data if necessary			
			CO	**KL**	**M**
		UNIT-I			
1.	**a).**	Explain the terms microscopic point of view, heat and work.	**1**	**2**	**7**
	b).	What do you mean by thermodynamic System? Discuss different types of systems with one example each.	**1**	**2**	**7**
		OR			
2.	**a).**	Show an expression for the equation of state for a perfect gas and discuss the universal gas constant.	**1**	**3**	**7**
	b).	The properties of a closed system change following the relation between pressure and volume as pV = 3.0 where p is in bar V is in m3. Calculate the work done when the pressure increases from 1.5 bar to 7.5 bar	**1**	**3**	**7**
		UNIT-II			
3.	**a).**	Explain the joules experiment. State its importance in thermodynamics.	**2**	**2**	**7**
	b).	0.44 kg of air at 180°C expands adiabatically to three times its original volume and during the process, there is a fall in temperature to 15°C. The work done during the process is 52.5 kJ. Calculate c_p and c_v.	**2**	**3**	**7**
		OR			
4.	**a).**	Infer an expression for Steady Flow Energy Equation (S.F.E.E.). Apply S.F.E.E for a steam Turbine and Condenser.	**2**	**4**	**7**
	b).	A turbine, operating under steady-flow conditions, receives 4500 kg of steam per hour. The steam enters the turbine at a velocity of 2800 m/min, an elevation of 5.5 m and a specific enthalpy of 2800 kJ/kg. It leaves the turbine at a velocity of 5600 m/min, an elevation of 1.5 m and a specific enthalpy of 2300 kJ/kg. Heat losses from the turbine to the surroundings amount to 16000 kJ/h. Determine the power output of the turbine.	**2**	**3**	**7**
		UNIT-III			
5.	**a).**	Discuss the limitations of first law of thermodynamics. State the various statements of second law of thermodynamics.	**3**	**2**	**7**
	b).	A fish freezing plant requires 40 tons of refrigeration. The freezing temperature is – 35°C while the ambient temperature is 30°C. If the performance of the plant is 20%of the theoretical reversed Carnot cycle working within the same temperature limits, calculate the power required. Take: 1 ton of refrigeration = 210 kJ/min.	**3**	**3**	**7**
		OR			
6.	**a).**	Discuss in detail the Clausius Theorem.	**3**	**2**	**7**
	b).	An iron cube at a temperature of 400°C is dropped into an insulated	**3**	**3**	**7**

		bath containing 10 kg water at 25°C. The water finally reaches a temperature of 50°Cat steady state. Given that the specific heat of water is equal to 4186 J/kg K. Determine the entropy changes for the iron cube and the water. Is the process reversible? If so, why?			
		UNIT-IV			
7.	**a).**	Explain the working of Otto cycle and show the expression for its thermal efficiency.	**4**	**2**	**7**
	b).	In an engine working on Dual cycle, the temperature and pressure at the beginning of the cycle are 90°C and 1 bar respectively. The compression ratio is 9. The maximum pressure is limited to 68 bar and total heat supplied per kg of air is 1750 kJ. Determine: (i) Pressure and temperatures at all salient points (ii) Air standard efficiency.	**4**	**3**	**7**
		OR			
8.	**a).**	With a neat sketch explain the principles of Carburetion in SI engines.	**4**	**2**	**7**
	b).	Calculate the relative efficiency based on indicated power and A:F ratio for a four-stroke gas engine working on Otto cycle from the following data: Brake power = 5 kW; Speed = 180 rpm; Volumetric efficiency=85%; Clearance volume is 1500 cm^3; Swept volume is 6500 cm^3; mechanical efficiency is 80%; Fuel consumption 4 m^3/hr. and C.V is 17,000 kJ/m^3.	**4**	**3**	**7**
		UNIT-V			
9.	**a).**	What is meant by abnormal combustion? Explain the phenomena of knock in SI engines.	**4**	**2**	**7**
	b).	Illustrate the importance of flame speed and its effects on engine variables.	**4**	**3**	**7**
		OR			
10.	**a).**	Discuss in detail the stages of combustion in CI engines with the help of a P- Θ Diagram.	**4**	**2**	**7**
	b).	What is indirect injection in CI engines? Explain briefly different divided combustion chambers with the help of neat sketches.	**4**	**2**	**7**

CO-COURSE OUTCOME **KL-KNOWLEDGE LEVEL** **M-MARKS**

					Course Code: B20ME2102
SAGI RAMA KRISHNAM RAJU ENGINEERING COLLEGE (A)					**R20**
II B.Tech. I Semester MODEL QUESTION PAPER					
MANUFACTURING PROCESS					
Mechanical Engineering					
Time: 3 Hrs					**Max. Marks: 70 M**
Answer **ONE Question** from **EACH UNIT**					
All questions carry equal marks					
			CO	**KL**	**M**
		UNIT-I			
1.	**a).**	Explain about primary and secondary manufacturing processes with examples.	**1**	**3**	**7**
	b).	Explain about a pattern and discuss about pattern allowances.	**1**	**3**	**7**
		OR			
2.	**a).**	Discuss about job and batch production with examples.	**1**	**3**	**7**
	b).	Explain the properties of green sand used for preparation of sand mould for casting.	**1**	**3**	**7**
		UNIT-II			
3.	**a).**	Explain the working of Permanent die casting and mention its advantages and disadvantages.	**2**	**3**	**7**
	b).	Explain the steps involved in shell moulding process with a neat sketch.	**2**	**3**	**7**
		OR			
4.	**a).**	Explain about hot chamber pressure die casting with neat sketch and mention its advantages and disadvantages.	**2**	**3**	**7**
	b).	Explain about the steps involved in making an investment casting with neat sketch.	**2**	**3**	**7**
		UNIT-III			
5.	**a).**	Mention the differences between the hot and cold working process.	**3**	**3**	**7**
	b).	Explain about hot extrusion process with a neat sketch.	**3**	**3**	**7**
		OR			
6.	**a).**	Explain about the concept of spring back and discuss about any two materials used in sheet metal forming.	**3**	**3**	**7**
	b).	Explain about the sheet metal shearing operations with a neat sketch.	**3**	**3**	**7**
		UNIT-IV			
7.	**a).**	Explain about drop and press forging operations with a neat sketch.	**4**	**3**	**7**
	b).	Explain about the high energy rate forming process.	**4**	**3**	**7**
		OR			
8.	**a).**	Explain about machine forging process with a neat sketch.	**4**	**3**	**7**
	b).	Explain about rotary swaging process.	**4**	**3**	**7**
		UNIT-V			
9.	**a).**	Explain the working principle of spot-welding process with a neat sketch and explain its methodology.	**5**	**3**	**7**
	b).	Explain about the metal inert gas welding process with a neat sketch.	**5**	**3**	**7**
		OR			
10.	**a).**	Distinguish the different flames used in arc welding process.	**5**	**3**	**7**
	b).	Explain the Tungsten inert gas welding process with a neat sketch	**5**	**3**	**7**

CO-COURSE OUTCOME **KL-KNOWLEDGE LEVEL** **M-MARKS**

					Course Code: B20ME2103
		SAGI RAMA KRISHNAM RAJU ENGINEERING COLLEGE (A)			**R20**
		II B.Tech. I Semester MODEL QUESTION PAPER			
		STRENGTH OF MATERIALS			
		Mechanical Engineering			
Time: 3 Hrs					**Max. Marks: 70 M**
		Answer **ONE Question** from **EACH UNIT**			
		All questions carry equal marks			
			CO	**KL**	**M**
		UNIT-I			
1.	**a).**	Explain Stress-Strain curve for a ductile material	**1**	**2**	**7**
	b).	A mild steel bar 25 mm diameter and 250 mm long is placed inside a brass tube, having an external diameter of 30 mm and internal diameter of 25 mm. The combination is then subjected to an axial load of 45 KN. Find (a) the stresses in the tube and the rod, (b) the shortening of rod. Take E_s = 210 GPa, and E_b = 80 GPa.	**1**	**3**	**7**
		OR			
2.		A point in a strained material is subjected to a tensile stress of 100 N/ mm^2 and a compressive stress of 80 N/ mm^2 acting on two mutually perpendicular planes and a shear stress of 20 N/ mm^2 acts along these planes. Determine the (i) resultant stress on a plane inclined at 40^0 with the plane of compressive stress. (ii) principal stresses and planes.	**1**	**3**	**14**
		UNIT-II			
3.		A beam 8.5 m long rests on supports 5 m apart. The right-hand end is overhanging from its support by 2 m and left-hand end by 1.5 m. The beam carries a UDL of 50 kN/m length between the supports only. The beam also carries a point load of 60 kN at the extreme right-hand end, and a point load of 40 kN at the left-hand end. Construct the SFD and BMD, and indicate the points of inflexion on the beam.	**2**	**3**	**14**
		OR			
4.		A beam of 10 m length is simply supported at its ends. It carries a UDL of 20 kN/m run over the length ofleft half of its span, together with concentrated loadsof 40 kN and 20 kN situated at 1.5 m and 2.5 m respectively from right hand support. Draw SFD andBMD.	**2**	**3**	**14**
		UNIT-III			
5.	**a).**	Derive the relation between curvature, slope and deflection for a beam.	**3**	**2**	**7**
	b).	A simply supported steel beam 6m long is circular in cross-section and is of 15 cm diameter. What point load should be placed at the mid span to resist the deflection to 1.035 cm? Take E = 2 X 10^5 N/mm^2. What will be the slope at the ends?	**3**	**3**	**7**
		OR			
6.		A simply supported beam of span *'l'* and of uniform flexural rigidity 'EI' carries a UDL of intensity 'w' covering exactly the left half of the span. Find:	**3**	**3**	**14**

		i.) equation of elastic curve. ii.) slope at left support. iii.) maximum deflection.			
		UNIT-IV			
7.	**a).**	Stating the assumptions of pure bending and derive the Flexure formula $M/I = \sigma/y = E/\rho$	**4**	**2**	**7**
	b).	Calculate the maximum stress in a round steel bar 12 cm in diameter and 20 m long due to its own weight, when it is simply supported at its ends. Weight of steel = 78,500 N/m^3.	**4**	**3**	**7**
		OR			
8.		A 7.5 cm X 5 cm rolled steel joist is freely supported over an effective span of 3 metres. The flanges are 0.5 mm thick while the web is 3.7 mm thick. Calculate the UDL the joist can carry if the maximum intensity of shear stress induced is limited to 40 N/mm^2.	**4**	**3**	**14**
		UNIT-V			
9.	**a).**	Derive an expression for power transmitted by a circular shaft.	**5**	**2**	**7**
	b).	A solid circular shaft has to transmit 120 kW at 120 rpm. The maximum torque is 25% greater than the mean torque. Find the diameter of the shaft required if the maximum shear stress is not to exceed 80 N/mm^2 and the angle of twist is not to exceed 1^0 in a length of 250 cm. Take $G = 8 \times 10^4$ N/mm^2.	**5**	**3**	**7**
		OR			
10.		Calculate the increase in volume enclosed by a boiler shell, 2.5 m long and 1 m in diameter, when it is subjected to an internal pressure of 1.5 N/mm^2. The wall thickness is such that the maximum tensile stress in the shell is 25 N/mm^2 under the pressure. $E = 2.1 \times 10^5$ N/mm^2 and $\mu = 0.3$.	**5**	**3**	**14**

CO-COURSE OUTCOME **KL-KNOWLEDGE LEVEL** **M-MARKS**

Course Code: B20HS2101

SAGI RAMA KRISHNAM RAJU ENGINEERING COLLEGE (A) **R20**

II B.Tech. I Semester MODEL QUESTION PAPER

MANAGERIAL ECONOMICS AND FINANCIAL ACCOUNTANCY

Mechanical Engineering

Time: 3 Hrs **Max. Marks: 70 M**

Answer **ONE Question** from **EACH UNIT**

All questions carry equal marks

		CO	KL	M
	UNIT-I			
1.	Define Managerial Economics and Explain its nature and scope.	**1**	**2**	**14**
	OR			
2.	What do you mean by Elasticity of demand? Explain in detail about degrees of Price elasticity of Demand?	**1**	**2**	**14**
	UNIT-II			
3.	Define Cost &classify the Elements of Cost?	**2**	**2**	**14**
	OR			
4.	How do you calculate BEP? What are its Assumptions and Applications?	**2**	**2**	**14**
	UNIT-III			
5.	What are Market Structures and explain the features of Perfect Competition?	**3**	**2**	**14**
	OR			
6.	Why is pricing significant in the context of business? Describe any four pricing practices?	**3**	**2**	**14**
	UNIT-IV			
7.	Describe about the Importance of Accounting and types of accounts.	**4**	**2**	**14**
	OR			
8.	From the following Trail Balance of Suresh as at December 31, 2013, prepare Trading, Profit and Loss Account for the year ended December 31, 2013 and a Balance Sheet as on that date:	**4**	**3**	**14**

Particulars	Dr. (Rs)	Cr. (Rs.)
Purchase of materials	32,000	
Productive wages	13,000	
Sales		60,000
Salaries	4000	
Travelling expenses	1000	
Carriage inwards	550	
Insurance	300	
Commission	650	
Rent and rates	1,000	
Cash in hand	350	
Cash at bank	5,550	
Repairs	600	
Sundry expenses	110	
Mortgage		6,100
Buildings	8,000	
Machinery	3,000	
Furniture	1,000	
Stock on hand (01-01-2013)	11,500	

		Capital		21,310			
		Sundry debtors	9,000				
		Sundry creditors		4,200			
			91,610	91,610			
	Adjust the following: (a) Prepaid rent Rs. 100 (b) Depreciate the following: • Building @ 10 percent per annum • Machinery @ 20 percent per annum • Furniture @ 15 percent per annum (c) Provide for bad debts Rs. 100 (d) Outstanding insurance Rs. 50 (e) Closing stock Rs. 12,000						
	UNIT-V						
9.	Explain about capital and the sources available for raising finance.				**5**	**2**	**14**
	OR						
10.	Explain about the concept and causes of depreciation. Evaluate the straight-line method and diminishing balance methods.				**5**	**2**	**14**

CO-COURSE OUTCOME **KL-KNOWLEDGE LEVEL** **M-MARKS**

					Course Code: B20ME2104
SAGI RAMA KRISHNAM RAJU ENGINEERING COLLEGE (A)					**R20**
II B.Tech. I Semester MODEL QUESTION PAPER					
Machine Drawing					
Mechanical Engineering					
Time: 3 Hrs		Answer **ALL Questions**			**Max. Marks: 70 M**
			CO	**KL**	**M**
1.	Answer the following with the help of a neat sketch				
	a).	British association thread profile with details.	**1**	**3**	**3**
	b).	Half sectional front view of a flanged nut.	**1**	**3**	**3**
	c)	Saddle keys.	**2**	**3**	**3**
	d)	Represent geometrical tolerance for indicating roundness of a surface.	**4**	**3**	**3**
	e)	Represent geometrical tolerance for indicating angularity of surface **A** with respect to surface **B.**	**4**	**3**	**3**
2.	With the help of a neat sketch provide two views of single riveted butt joint (double strap) for d=20mm.		**2**	**3**	**10**
3.	Draw two views of a Oldham coupling for a shaft of diameter D=20mm.		**3**	**3**	**10**
4.	Calculate the type of fit which is represented by $50H_7g_6$ and also represent the same with a neat sketch.		**4**	**3**	**10**
5.	Prepare assemble drawing for the following figure with the help of the table provided below.		**5**	**3**	**25**

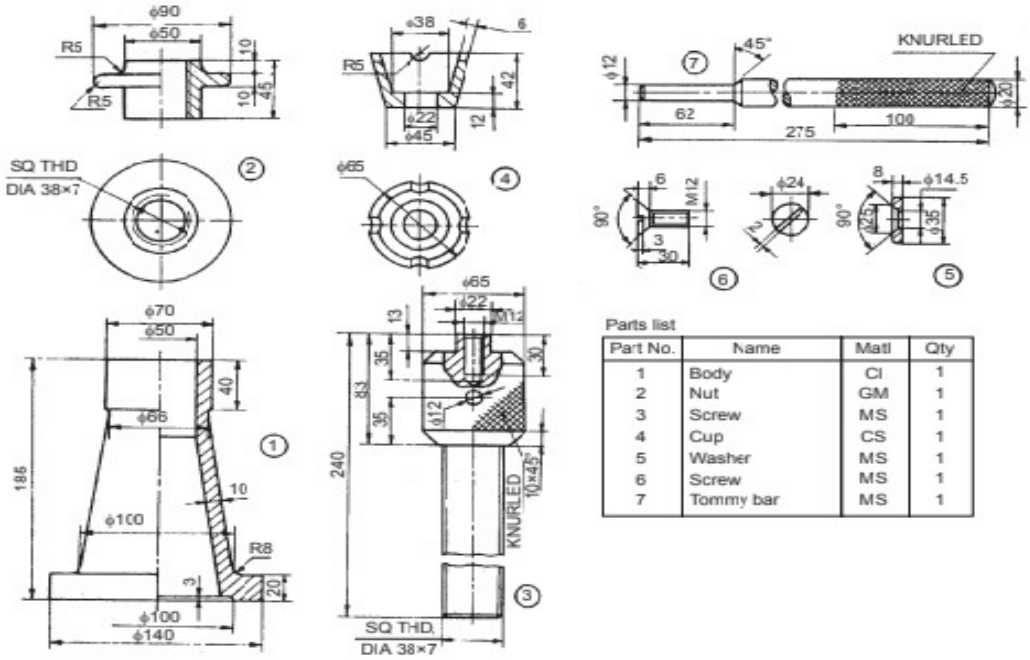

Part No.	Name	Matl	Qty
1	Body	CI	1
2	Nut	GM	1
3	Screw	MS	1
4	Cup	CS	1
5	Washer	MS	1
6	Screw	MS	1
7	Tommy bar	MS	1

CO-COURSE OUTCOME **KL-KNOWLEDGE LEVEL** **M-MARKS**

Course Code: B20BS2203

SAGI RAMA KRISHNAM RAJU ENGINEERING COLLEGE (A) **R20**

II B.Tech. II Semester MODEL QUESTION PAPER

OPERATIONS RESEARCH

Mechanical Engineering

Time: 3 Hrs **Max. Marks: 70 M**

Answer **ONE Question** from **EACH UNIT**

All questions carry equal marks

			CO	KL	M
		UNIT-I			
1.		Suppose an industry is manufacturing two types of products P1 and P2. The profits per Kg of the two products are Rs.30 and Rs.40 respectively. These two products require processing in three types of machines. The following table shows the available machine hours per day and the time required on each machine to produce one Kg of P1 and P2. Formulate the problem in the form of linear programming model and solve it by Graphical Method.	**1**	**3**	**14**

Profit/Kg	P1 Rs.30	P2 Rs.40	Total available Machine hours/day
Machine 1	3	2	600
Machine 2	3	5	800
Machine 3	5	6	1100

		OR			
2.		Find the solution of the following LPP:	**1**	**3**	**14**

Maximize $z = 3x_1 + 2x_2 + 2x_3$

subject to $x_1 + x_2 + 2x_3 \le 38$

$2x_1 + x_2 + x_3 \ge 24$

with $x_1 \ge 0,\ x_2 \ge 0,\ x_3 \ge 0$

		UNIT-II			
3.		Solve the following transportation problem.	**2**	**3**	**14**

Destination → Origin ↓	D_1	D_2	D_3	D_4	Supply
O_1	5	3	6	2	19
O_2	4	7	9	1	37
O_3	3	4	7	5	34
Demand	16	18	31	25	90

		OR			
4.		Consider the problem of assigning five jobs to five persons. The assignment costs are given as follows. Determine the optimum assignment schedule.	**2**	**3**	**14**

		Job Person 1 2 3 4 5 A 8 4 2 6 1 B 0 9 5 5 4 C 3 8 9 2 6 D 4 3 1 0 3 E 9 5 8 9 5			
		UNIT-III			
5.		Find the sequence that minimizes the total time required in performing the following jobs on three machines in order ABC. Processing times (in hours) are given in the following table : Job : 1 2 3 4 5 Machine A : 8 10 6 7 11 Machine B : 5 6 2 3 4 Machine C : 4 9 8 6 5	**3**	**3**	**14**
		OR			
6.		An auto parts supplier sells Hardy-brand batteries to car dealers and auto mechanics. The annual demand is approximately 1,200 batteries. The supplier pays Rs.28 for each battery and estimates that the annual holding cost is 30 percent of the battery's value. It costs approximately Rs. 20 to place an order (managerial and clerical costs). The supplier currently orders 100 batteries Per month. a. Determine the ordering, holding and total inventory costs for the current order quantity. b. Determine the economic order quantity (EOQ). c. How many orders will be placed per year using the EOQ? d. Determine the ordering, holding, and total inventory costs for the EOQ? e. How has ordering cost changed? Holding cost? Total inventory cost?	**3**	**3**	**14**
		UNIT-IV			
7.		Solve the following 6x2 game graphically. $\begin{pmatrix} 1 & -3 \\ 3 & 5 \\ -1 & 6 \\ 4 & 1 \\ 2 & 2 \\ -5 & 0 \end{pmatrix}$	**4**	**3**	**14**
		OR			
8.		There is cashier in a store, 15 customers arrive on an average of every 10 minutes. While cashier can serve 18 customers in 10 minutes. Assuming Poisson's	**4**	**3**	**14**

distribution for arrival rate and exponential distribution for service rate, Find the following

a. Average queue length.
b. Average number of customers in the system.
c. Average time customer spends in the queue.
d. Average time customer spends in the system.

UNIT-V

9. The following are the time estimates and the precedence relationships of the activities in a project network: **5** **3** **14**

Activity	A	B	C	D	E	F	G	H	I	J	K
Predecessor activity	-	-	-	A	B	B	C	E	D	F,G	H,I
Timeestimate (weeks)	4	7	3	6	4	7	6	10	3	4	2

Draw the project network diagram. Determine the critical path, the project completion time, Total float, Free float and Independent float.

OR

10. The time estimates (in weeks) and other characteristics of a project are given below. **5** **3** **14**

Activity	1-2	1-6	2-3	2-4	3-5	4-5	6-7	5-8	7-8
Optimistic time	3	2	6	4	8	3	3	2	8
Most likely time	6	5	12	5	11	7	9	4	16
Pessimistic time	9	8	18	6	14	11	15	6	18

Determine (i) Critical path (ii) Expected to complete the project and also prepare activity schedule.

CO-COURSE OUTCOME **KL-KNOWLEDGE LEVEL** **M-MARKS**

					Course Code: B20ME2201
SAGI RAMA KRISHNAM RAJU ENGINEERING COLLEGE (A)					**R20**
II B.Tech. II Semester MODEL QUESTION PAPER					
FLUID MECHANICS AND HYDRAULIC MACHINES					
Mechanical Engineering					
Time: 3 Hrs					**Max. Marks: 70 M**
Answer **ONE Question** from **EACH UNIT**					
All questions carry equal marks					
Assume suitable data if necessary					
			CO	**KL**	**M**
		UNIT-I			
1.	a)	Define Hydrostatic law and Derive expression for pressure variation in a static fluid.	1	3	7
	b)	The dynamic viscosity of an oil which is used for lubrication between shaft and sleeve is 6poise. If the shaft is of diameter 0.4m and rotates at190 rpm, calculate the power lost in the bearing for a sleeve length of90mm. The thickness of the oil film is 1.5mm.	1	3	7
		OR			
2.	a)	Derive an equation for total pressure and centre of pressure on vertical plane surface	1	3	7
	b)	A uniform body of size 4 m long, 2 m wide, 1 m deep floats in water. What is the weight of the body if depth of immersion is 0.6 m? Determine the meta centric height also.	1	3	7
		UNIT-II			
3.	a)	Derive 3D- continuity equation in Cartesian co-ordinate system.	2	3	7
	b)	If for two-dimensional potential flow the velocity potential is given by $\phi=x(2y-1)$. Determine the magnitude of the resultant velocity, direction of the resultant velocity also determine the value of stream function Ψ at(4,5).	2	3	7
		OR			
4.	a)	Derive Bernoulli's Equation from Euler's Equation for incompressible flow.	2	3	7
	b)	An orifice meter with orifice diameter 15 cm is inserted in a pipe of30cmdiameter. The pressure difference measured by a mercury oil differential manometer on the two sides of the orifice meter gives a reading of 50cm of mercury. Find the rate of flow of oil of sp.gr. 0.9when the co-efficient of discharge of the orifice meter = 0.64.	2	3	7
		UNIT-III			
5.	a)	Illustrate the head losses due to friction in pipes by using Darcy Weisbach equation.	3	4	7
	b)	Two pipes of lengths 2500 m each and diameters 80 cm and 60 cm respectively, are connected in parallel. The co-efficient of friction for each pipe is 0.006. The total flow is equal to 250 litres/sec. Find the rate of flow in each pipe.	3	3	7
		OR			
6.	a)	Deduce an Expression for the drag force along the flat plate due to boundary layer formation.	3	4	7
	b)	A plate 450mm×150mm has been placed longitudinally in a stream of crude oil of specific gravity 0.925 and kinematic viscosity 0.9 stokes	3	3	7

		which flows with a velocity of 6 m/s. Calculate (i) The frictional drag on the plate and (ii) The thickness of the boundary layer at the trailing edge.			
		UNIT-IV			
7.	a)	Prove that the work done per second on a series of moving curved vanes by a jet of water striking at one of the tips of the vane is given by work done /sec=$\rho a v_1[V_{w_1} \pm V_{w_2}] \times u$.	4	4	7
	b)	A Jet of water of diameter 75 mm strikes a curved plate at its centre with a velocity of 20 m/s. The curved plate is moving with a velocity of 8 m/s in the direction of the jet. The jet is deflected through an angle of 1650.Assuming the plate smooth find: (i) Force exerted on the plate in the direction of jet;(ii) power of the jet; (iii)Efficiency of the jet.	4	3	7
		OR			
8.	a)	Analyse the characteristic curves of hydraulic turbines.	4	4	7
	b).	A turbine is to operate under a head of 25 m at 200 rpm. The discharge is 9 m^3/sec. If the efficiency is 90%, determine the performance of the turbine under a head of 20 m.	4	3	7
		UNIT-V			
9.	a).	Deduce an expression for minimum speed of starting a centrifugal pump.	5	4	7
	b).	Two geometrically similar pumps are running at same speed of 1000 r.p.m. one pump has an impeller diameter of 0.30 m and lifts water at the rate of 20 lit/sec against a head of 15 m. determine the head and impeller diameter of the other pump to deliver half the discharge .	5	3	7
		OR			
10.	a).	Analyse Effect of acceleration of piston on velocity and pressure in suction and delivery pipes.	5	4	7
	b).	A cylinder of single acting reciprocating pump is 150 mm in diameter and300mmin stroke. The pump is running at 30 rpm. and discharge water to a height of 12 m. The diameter and length of the delivery pipe are 0.1m and 30mrespectively. If a large air vessel is fitted in the delivery pipe at a distance of 2m from the centre of the pump, find the pressure head in the cylinder (i) At the beginning of the delivery stroke; (ii) In the middle of the delivery stroke Take f.=0.01.	5	3	7

CO-COURSE OUTCOME **KL-KNOWLEDGE LEVEL** **M-MARKS**

					Course Code: B20ME2202
		SAGI RAMA KRISHNAM RAJU ENGINEERING COLLEGE (A)			**R20**
		II B.Tech. II Semester MODEL QUESTION PAPER			
		APPLIED THERMODYNAMICS			
		Mechanical Engineering			
Time: 3 Hrs					**Max. Marks: 70 M**
		Answer **ONE Question** from **EACH UNIT**			
		All questions carry equal marks			
		Assume suitable data if necessary			
		(Use of steam tables and Mollier chart is allowed)			
			CO	**KL**	**M**
		UNIT-I			
1.	**a).**	Explain the P-V-T surface of pure substance with the help of P-V-T, P-V and P-T diagrams	**1**	**2**	**7**
	b).	Calculate the internal energy, enthalpy and entropy of 1kg of steam at 10 bar, when the condition of steam is (i) 0.9 dry, (ii) dry and saturated, (iii) superheated steam at 225^0C	**1**	**3**	**7**
		OR			
2.	**a).**	Explain the working principle of Throttling Calorimeter with neat sketch and determine dryness fraction.	**1**	**2**	**7**
	b).	Steam at a pressure of 5 bar passes into a tank containing water where it gets condensed. The mass and temperature in the tank before the admission of steam are 50 kg and 20°C respectively. Calculate the dryness fraction of steam as it enters the tank if 3 kg of steam gets condensed and resulting temperature of the mixture becomes 40°C. Takewaterequivalentoftankas1.5kg.	**1**	**3**	**7**
		UNIT-II			
3.	**a).**	Infer an expression for thermal efficiency of Reheat cycle with help of T-S and h-s diagram	**2**	**4**	**7**
	b).	A steam turbine is fed with steam having an enthalpy of 3100 kJ/kg. It moves out of the turbine with an enthalpy of 2100 kJ/kg. Feed heating is done at a pressure of 3.2 bar with steam enthalpy of 2500 kJ/kg. The condensate from a condenser with an enthalpy of 125 kJ/kg enters into the feed heater. The quantity of bledsteam is 11200 kg/hr. Determine the power developed by the turbine. Assume that the water leaving the feed heater is saturated liquid at 3.2bar and the heater is direct mixing type. Neglect pump work.	**2**	**3**	**7**
		OR			
4.	**a).**	Explain the binary vapour power cycle with its layout and infer an expression for thermal efficiency	**2**	**4**	**7**
	b).	A simple Rankine cycle works between pressures 28 bar and 0.06 bar, the initial condition of steam being dry saturated. Calculate the cycle efficiency and work ratio	**2**	**3**	**7**
		UNIT-III			
5.	**a).**	Briefly discuss different types of nozzles and infer an expression for exit velocity	**3**	**4**	**7**
	b).	Stream having pressure of10.5 bar and 0.95 dryness is expanded	**3**	**3**	**7**

		through a convergent-divergent nozzle and the pressure of steam leaving the nozzle is 0.85 bar. Find the velocity at the throat for maximum discharge conditions. Index of expansion may be assumed as 1.135.Calculate mass rate of flow of steam through the nozzle			
		OR			
6.	**a).**	Infer the conditions for maximum blade efficiency of an Impulse turbine	**3**	**4**	**7**
	b).	The velocity of steam exiting the nozzle of the impulse stage of turbine is 400 m/s. The blade operates close to the maximum blade efficiency. The nozzle angle is 20^0, considering equiangular blades and neglecting blade friction, calculate for a steam flow 0.6 kg/s, the diagram power and the diagram efficiency	**3**	**3**	**7**
		UNIT-IV			
7.	**a).**	Illustrate the working of low-level parallel flow jet condenser and Down flow type surface condenser with help a neat sketch	**4**	**3**	**7**
	b).	A Surface condenser is designed to handle 10000 kg of steam per hour. The steam enters at 0.08 bar abs. and 0.9 dryness and the condensate leaves at the corresponding saturation temperature. The pressure is constant throughout the condenser. Estimate the cooling water flow rate per hour, if the cooling water temperature rise is limited to 10^0C	**4**	**3**	**7**
		OR			
8.	**a).**	Illustrate the working of Cochran Boiler with help of a neat sketch	**4**	**3**	**7**
	b).	Briefly Discuss the following boiler mountings (i) Water level Indicator (ii) Pressure Gauge (iii) Safety Valve (iv) Blow-off Cock	**4**	**2**	**7**
		UNIT-V			
9.	**a).**	A simple gas turbine cycle works with a pressure ratio of 8. The compressor and turbine inlet temperatures are 300K and 800K respectively. If the volume flow rate of air is 250 m^3/s, compute the power output and thermal efficiency.	**3**	**3**	**7**
	b).	Infer an expression for the optimum pressure ratio simple Brayton cycle.	**3**	**4**	**7**
		OR			
10.	**a).**	What are the modifications of the simple Brayton cycle to improve its efficiency? Infer necessary equations with neat sketches.	**3**	**4**	**7**
	b).	Discuss briefly about the following technologies. (i) Turbojet (ii) Turboprop(iii) Ramjet (iv) Hybrid rocket	**3**	**2**	**7**

CO-COURSE OUTCOME **KL-KNOWLEDGE LEVEL** **M-MARKS**

					Course Code: B20ME2203
SAGI RAMA KRISHNAM RAJU ENGINEERING COLLEGE (A)					**R20**
II B.Tech. II Semester MODEL QUESTION PAPER					
METAL CUTTING AND MACHINE TOOLS					
Mechanical Engineering					
Time: 3 Hrs					**Max. Marks: 70 M**
Answer **ONE Question** from **EACH UNIT**					
All questions carry equal marks					
			CO	**KL**	**M**
		UNIT-I			
1.	**a).**	Distinguish between the orthogonal and oblique cutting with a neat sketch.	**1**	**3**	**4**
	b).	Derive expression for cutting forces during metal cutting by using Merchant Theory.	**1**	**3**	**10**
		OR			
2.	**a).**	Explain about the single point cutting tool nomenclature.	**1**	**3**	**4**
	b).	Explain about the factors affecting the tool life and mention the tool wear mechanisms.	**1**	**3**	**10**
		UNIT-II			
3.	**a).**	Explain about the specifications of a lathe machine with neat sketch.	**2**	**3**	**4**
	b).	Explain about the swiveling the compound rest method and tail stock set over method in taper turning on lathe machine.	**2**	**3**	**10**
		OR			
4.	**a).**	Explain about the crank and slotted link mechanism in shaper machine.	**2**	**3**	**7**
	b).	Explain about the jig boring with a neat sketch.	**2**	**3**	**7**
		UNIT-III			
5.	**a).**	Explain about the parts and functioning of radial arm drilling machine with a neat sketch.	**3**	**3**	**7**
	b).	Distinguish between plain, universal and omniversal milling machine.	**3**	**3**	**7**
		OR			
6.	**a).**	Explain about the up milling and down milling process with a neat sketch.	**3**	**3**	**7**
	b).	Explain about the broach tool nomenclature with a neat sketch.	**3**	**3**	**7**
		UNIT-IV			
7.	**a).**	Explain about the grit grade and structure of the grinding wheel.	**4**	**3**	**7**
	b).	Explain about the lapping and honing operations.	**4**	**3**	**7**
		OR			
8.	**a).**	Explain about the working of vertical grinding machine.	**4**	**3**	**7**
	b).	Explain the glazing and loading of grinding wheel.	**4**	**3**	**7**
		UNIT-V			
9.	**a).**	Explain the process of AJM with a neat sketch and mention its advantages and disadvantages.	**5**	**3**	**7**
	b).	Explain the process of USM with a neat sketch and mention its advantages and disadvantages.	**5**	**3**	**7**
		OR			

10.	**a).**	Explain the process of EBM with a neat sketch and mention its advantages and disadvantages.	**5**	**3**	**7**
	b).	Explain the wire cut EDM process with a neat sketch and mention its advantages and disadvantages.	**5**	**3**	**7**

CO-COURSE OUTCOME **KL-KNOWLEDGE LEVEL** **M-MARKS**

					Course Code: B20ME2204
		SAGI RAMA KRISHNAM RAJU ENGINEERING COLLEGE (A)			**R20**
		II B.Tech. II Semester MODEL QUESTION PAPER			
		KINEMATICS OF MACHINERY			
		Mechanical Engineering			
Time: 3 Hrs					**Max. Marks: 70 M**
		Answer **ONE Question** from **EACH UNIT**			
		All questions carry equal marks			
			CO	**KL**	**M**
		UNIT-I			
1.	**a).**	What is Mechanism? Differentiate between Machine, Mechanism and Structure	**1**	**2**	**7**
	b).	Explain various types of constrained motions with a neat sketch	**1**	**2**	**7**
		(OR)			
2.	**a).**	Explain about mobility of mechanism in Space and plane with Grubler's criterion	**1**	**2**	**4**
	b).	Sketch and explain all the inversions of a single slider crank chain	**1**	**2**	**10**
		UNIT-II			
3.	**a).**	State and prove Kennedy's theorem.	**2**	**2**	**4**
	b).	Fig. shows a mechanism in which OA=QC=100mm,AB=QB=300mm and CD=250mm the crank OA rotates at 150 rpm in the clockwise direction Determine the (i) velocity of slider at D(ii)Angular velocities of links QB and AB (iii)Rubbing velocity at the pin B which is 40mm diameter 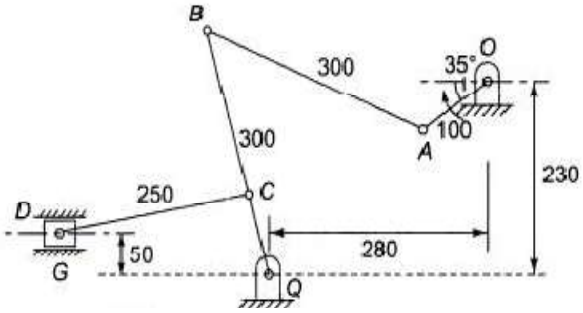	**2**	**3**	**10**
4.	**a).**	Explain the concept of Coriolis component of acceleration.	**2**	**2**	**7**
	b).	PQRS is a four bar chain as shown in fig. with links PS fixed the length of the links are PQ=62.5mm, QR=175mm,RS=112.5mm and PS=200MM.The crank PQ rotates at 10rad/s clockwise Draw the velocity and acceleration diagram when angle PQS=60^0 and Q and R lie on same side of PS. Calculate the angular velocity and angular acceleration of links QR and RS	**2**	**3**	**7**

		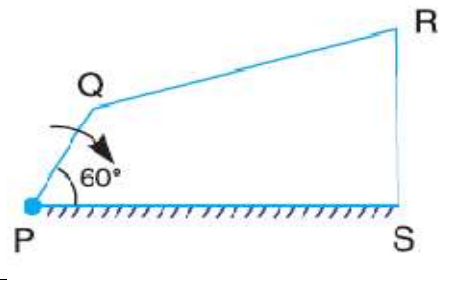			
		UNIT-III			
5.	**a).**	Explain about Scott Russel and modified Scott Russel mechanisms with neat sketch	**3**	**2**	**7**
	b).	Sketch a Paucellier mechanism. Based on mathematical condition examine either it traces a straight line path or not	**3**	**4**	**7**
		(OR)			
6.	**a).**	Derive an expression for correct steering	**3**	**3**	**7**
	b).	Derive an Expression for the ratio of shaft velocities for the Hooke's joint (ω / ω1)	**3**	**3**	**7**
		UNIT-IV			
7.	**a).**	What is a cam? classify various types of cams	**4**	**4**	**4**
	b).	Design a cam for operating the exhaust valve of an oil engine. It is required to give equal uniform acceleration and retardation during opening and closing of the valve each of which corresponds to 60° of cam rotation. The valve must remain in the fully open position for20° of cam rotation. The lift of the valve is 37.5 mm and the least radius of the cam is 40 mm. The follower is provided with a roller of radius 20 mm and its line of stroke passes through the axis of the cam.	**4**	**4**	**10**
		OR			
8.	**a).**	Explain about types of followers	**4**	**2**	**4**
	b).	A cam is to be designed for a knife edge follower with the following data : 1. Cam lift = 40 mm during 90° of cam rotation with simple harmonic motion. 2. Dwell for the next 30°. 3. During the next 60° of cam rotation, the follower returns to its original position with simple harmonic motion. 4. Dwell during the remaining 180°. Design the profile of the cam when (a) the line of stroke of the follower passes through the axis of the cam shaft, and The radius of the base circle of the cam is 40 mm. Determine the maximum velocity and acceleration of the follower during its ascent and descent, if the cam rotates at 240 r.p.m.	**4**	**4**	**10**
		UNIT-V			
9.	**a).**	Derive an expression for constant velocity ratio of a given meshed	**4**	**4**	**6**

		gears			
	b).	A pair of involute spur gears with 16^0 pressure angles and pitch of module 6mm is in mesh. the no of teeth on pinion is 16 and its rotational speed is 240r.p.m. when the gear ratio is 1.75, find in order that the interference is just avoided; (i) the addendum on pinion and gear wheel (ii)the length of path of contact	**4**	**3**	**8**
		(OR)			
10.	**a).**	What is Gear train? Explain about various Gear trains with neat sketch	**4**	**2**	**5**
	b).	An epicyclic gear consists of a pinion, a wheel of 40 teeth and an annulus with 84 teeth concentric with the wheel .The pinion gears with the wheel and annulus. The arm that carries the axis of the pinion rotates at 100rpm.If the annulus is fixed, find the speed of the wheel.	**4**	**3**	**9**

CO-COURSE OUTCOME **KL-KNOWLEDGE LEVEL** **M-MARKS**